EATON | Cutler-Hammer

Clipper Power System — Visor™ Series Installation and Operation Manual

Instruction Manual

(This manual applies to all Visor Series surge protection devices, including Retrofit, Integrated, MCC and Switchgear applications.)

New Information

Description	*Page*
Section 1 Introduction	**2**
Section 2 Installation Procedures	**2**
Section 3 Operating Features	**7**
Section 4 Troubleshooting	**7**
Section 5 Warranty	**15**

Section 1 Introduction

Clipper Power System — Visor™ Series (referred to as Visor from this point forward) surge protection and filtering units provide clean power for sensitive electronic loads.

The Visor units shunt high energy induced lightning surges, as well as other forms of transient disturbances. Properly installed Visor units protect critical equipment in hospital, commercial, computer, manufacturing, telecommunication, financial and military facilities.

The Visor removes power disturbances from electrical distribution systems using a low impedance shunt path to ground. Surges and electrical line noise are absorbed by the CPS and are prevented from travelling through distribution system wires to sensitive electronic loads. Prior to installing the Visor, check the unit's voltage and configuration to verify it matches your system voltage and wiring configuration.

⚠ WARNING

INSTALLING A PROTECTION DEVICE WHICH IS UNDER-RATED FOR THE ELECTRICAL SYSTEM VOLTAGE CAN CREATE A POTENTIALLY HAZARDOUS CONDITION.

Section 2 of this manual details the installation procedures for the CPS Visor Series SPDs.

Section 3 of this manual describes the operating features for the CPS Visor Series SPDs.

Section 4 of this manual provides a detailed troubleshooting guide.

Note: Surge Protective Devices and Hi-Potential (Hi-Pot) Testing.

⚠ CAUTION

CONDUCTING DIELECTRIC OR HI-POTENTIAL TESTING WILL CAUSE INTERNAL DAMAGE TO SPD UNIT.

DO NOT PERFORM DIELECTRIC OR HI-POTENTIAL TESTING WITH THE SPD UNIT INSTALLED.

It is a common procedure to test distribution equipment with a form of hi-pot (or dielectric or megger) testing. The hi-pot tester outputs a high voltage signal at low current that will shut down if a short circuit occurs. The principle behind hi-pot testing is that the high voltage will find any faults in the distribution system and then quickly shuts down without damaging the distribution equipment. Hi-pot testing is usually conduction phase and neutral to ground.

1.1 Surge Protective Device

A Surge Protective Device (SPD) acts very quickly to suppress high voltages before they can damage sensitive electronics. An SPD normally acts in the nanoseconds range and can withstand tens of thousands of amps repeatedly. SPDs are not designed to prevent a continued overvoltage without damage. In order to protect electronics from damage, an SPD must be connected from phase to ground. Lightning surges are almost always shunted to ground and the SPD must be connected this way to provide protection.

1.2 The Problem

During a hi-pot test, the SPD will turn on and shunt the high voltage to ground. The hi-pot tester will continue to supply current until it internally records the fault condition. By this time, the SPD has been exposed to a continuous current that can damage the internal components. To prevent damage, it is critical that hi-pot testing not be performed on connected SPDs to prevent damage. From the installer's point of view, it is also important that SPDs are not connected while performing a hi-pot test since the SPD will always cause the test to fail, thus defeating the purpose of the test.

1.3 Disconnecting SPDs/ Performing Hi-Pot Testing

The only way to perform a hi-pot test in the presence of an SPD is to disconnect the SPD from the distribution system. If the unit is connected through a circuit breaker, the breaker should be shut off as a first step. This is sufficient for a delta system to remove the SPD. On wye connected systems, the neutral must also be removed so that all paths to ground are isolated. An alternative method is to remove the ground from the SPD before any hi-pot testing is performed. All grounds must be removed: the wired ground, the conduit ground, and the case ground. Because it is easy to miss a ground connection, it is recommended that the line and neutral connection are removed rather than the ground connection.

1.3.1 Eaton Electrical Specific Instructions

Eaton Electrical tests each device and assembly separately for dielectric breakdown. The assembled SPD has already been tested at the factory. Additional tests should not be required. Due to the possible damage that can occur, all SPDs have a caution label applied warning against hi-pot testing of the assembly. We recommend that hi-pot testing not be done on distribution equipment with a retrofit SPD already mounted. If hi-pot testing is still going to be done, it can be accomplished by following the above instructions and removing the phases and neutral connections from the SPD. If all wires to these terminals are removed, a hi-pot test can be safely performed. It is very important to reconnect all wires after the test. If any wire is left off, it can constitute a serious safety hazard or can defeat the operation of the SPD rendering it non-functioning.

For Motor Control Centers (MCCs), it is recommended to physically remove the MCC unit (which houses the SPD) from the MCC structure. This is a simple task and will ensure that the SPD is not damaged from hi-pot testing.

Section 2 Installation Procedures

2.1 Site Preparation

Verify your system application voltage and wiring configuration is the same as the enclosed Visor by checking the voltage rating label located on the Visor container.

Review the site to ensure the physical space required to install the Visor exists.

Check the facility grounding system. All grounding, bonding and earthing must meet NEC® or CEC, as well as any other applicable national or local codes. A poor ground or grounding/ bonding violations affect the suppressor's ability to function as specified.

⚠ CAUTION

VISOR TO BE INSTALLED OR REPLACED BY A QUALIFIED ELECTRICIAN.

2.2 Installation Recommendation for Retrofit — Where to Install the Visor?

Service entrance applications (switchboards and switchgear): The optimum location for the Visor unit is on the load side of the main breaker. If this is not possible, select the next closest location. *Minimize the lead length between the suppressor and bus bars* (including the ground bus).

Panelboard applications: For optimum performance, install the Visor adjacent to the first breaker after the incoming lug/main breaker. If this location is occupied, select the next closest breaker. If no wall space is available at the side of the panelboard, locate the Visor directly above or below the panel.

Remove the five screws from the front of the unit, and lift out the entire front panel. Mount the device to the wall using the convenient holes in the back of the container.

2.3 Minimize Installation Lead Length

To ensure maximum performance and best possible protection for connected equipment, **the Visor must be installed as close to the panel/switchboard/ switchgear as possible.** The wire length between the Visor and installation breaker should be as short as possible.

Note: For convenience, the Retrofit Visor is provided with two sets of terminal lugs to permit left or right side installation adjacent to the electrical equipment while minimizing wiring lead length. ONE SIDE ONLY OF THE SPD SHOULD BE CONNECTED — AN SPD IS A PARALLEL CONNECTION DEVICE, ADDITIONAL LOADS SHOULD NOT BE CONNECTED IN SERIES.

⚠ WARNING

TURN OFF POWER SUPPLY BEFORE WORKING INSIDE.

2.4 Wiring

Turn OFF the power to the electrical distribution equipment where the Visor SPD is to be installed.

Install a branch circuit breaker to feed the Visor for ease of installation. The unit contains UL® and CSA® approved fusing to protect against short circuit fault conditions within the device.

Overcurrent protection is required, (see **Table 1** for required circuit breaker size). Follow NEC, CEC, as well as any other applicable national or local codes when connecting the Visor directly to the bus bar.

Note: 30 ampere circuit breaker or fuses with a recommendation of RK5-30 amperes must be installed ahead of SPD for retrofit applications.

The unit is provided with 8 knockout holes — 3 on each side and 2 on the bottom. Remove the knockout closest to the intended lead-out from the panelboard. Install metal conduit (rigid or flexible) between the unit and the electrical panel. Run wiring from the panelboard to the Visor terminals, which are labelled Phases A, B, C, Neutral and Ground (see **Table 1** for recommended wire size).

Note: Twist and bind together all leads. Route the wires such that their overall length is kept to a minimum. This reduces line impedance and optimizes performance.

Interior View of a Retrofit Visor

Strip the ends of the wires and terminate them in the panelboard. Ensure the use of proper color codes and tighten all connections. Green or green/yellow (ground), white (neutral), red (hot), blue (hot), black (hot).

Recheck all connections.

If remote monitoring is employed, connect the Form C contacts to an alarm or building monitoring system (such as an addressable relay). These contact relays will accept up to 220 Vac, 1A (see **Section 3.2.3**).

Note: Form C relay contacts are "fail safe" and only change state when power is applied to the Visor, or if the unit is damaged.

Prior to SPD energization, ensure that the front cover is securely fastened.

Switch the MAIN power to the ON position. Switch the branch circuit breaker supplying the SPD to the ON position. Ensure all status indicator lights are on (see **Section 3** — Operating Features).

Table 1. Required Circuit Breaker & Wire Size

Visor Model	Wire Gauge Required	Circuit Breaker or Fuse Size
Retrofit	#10 – 2 AWG	30 Amperes

MCC Unit (Door Removed)

Installation Recommendation for Integrated SPDs in Motor Control Centers, Switchboards/ Switchgear, Busway and Panelboards

2.5 Motor Control Center (MCC) Components

The Visor unit has been installed in a standard MCC bucket and factory tested to facilitate easy installation. For MCCs, the diagnostic and monitoring display protrudes and is viewable via the door cutout.

2.6 Recommended Visor Location (MCC)

For service entrance MCC structures, the optimum location for the Visor unit is on the load side of the main breaker. For sub-feed MCC structures, the Visor should be installed close to microprocessor-based loads (i.e., PLC, sensors, digital equipment). In this location, the Visor reduces transient/electromagnetic interference (EMI) effects from drives and protects other associated motor loads.

2.7 Installation

For MCC applications, slide the Visor bucket assembly into the MCC structure. Close the door and securely fasten the quarter-turn door latches.

If a remote monitoring option is employed, connect the Form C contacts to an alarm or building monitoring system. These contact relays will accept up to 220 Vac, 1A. Switch the MAIN power to the ON position for the panelboard and Visor device.

Ensure indicator lights are lit (see **Section 3** — Operating Features).

A 30 ampere circuit breaker or fuse is recommended as a disconnect for MCC SPD applications.

2.7.1 Torque Specifications

All installations, MCC, Switchgear/Switchboards/Busway and Panelboards must adhere to the following torque limits regarding the SPD connection to cable or bus. See **Figures 1** and **2** below.

Table 2. Torque Connections

Connection Type	Lbs. – Inch (Nm)
Phase	55 (6.2)
Neutral/Ground	55 (6.2)

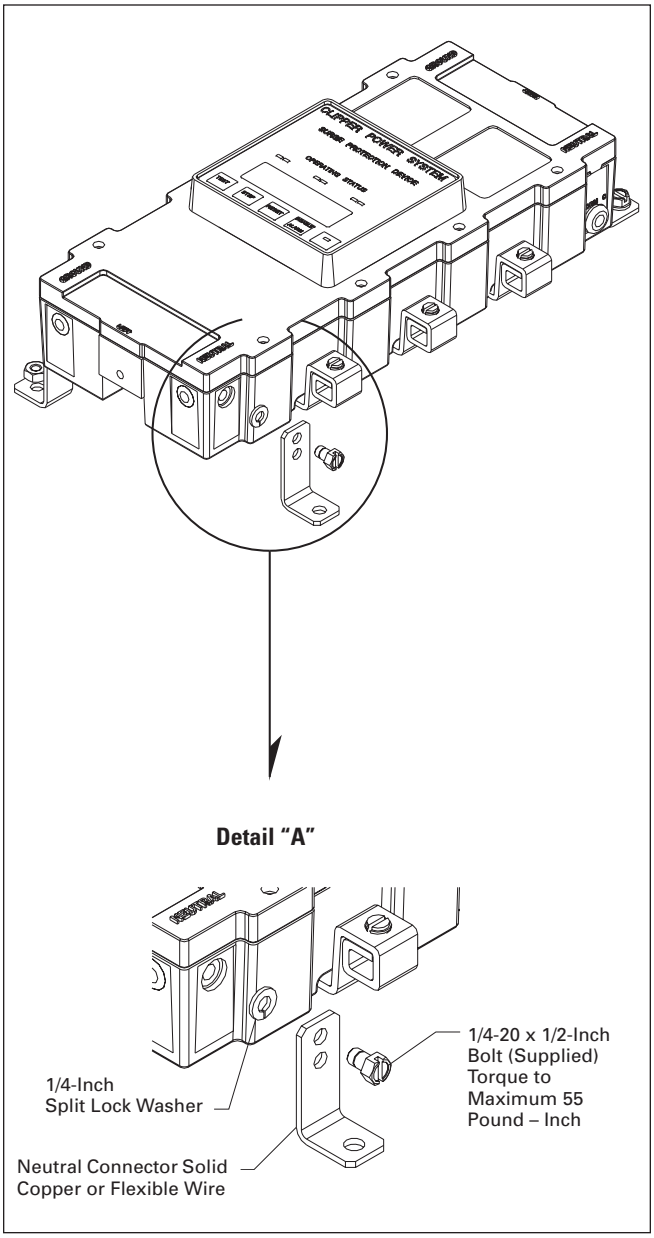

Figure 1. Torque Specification 1

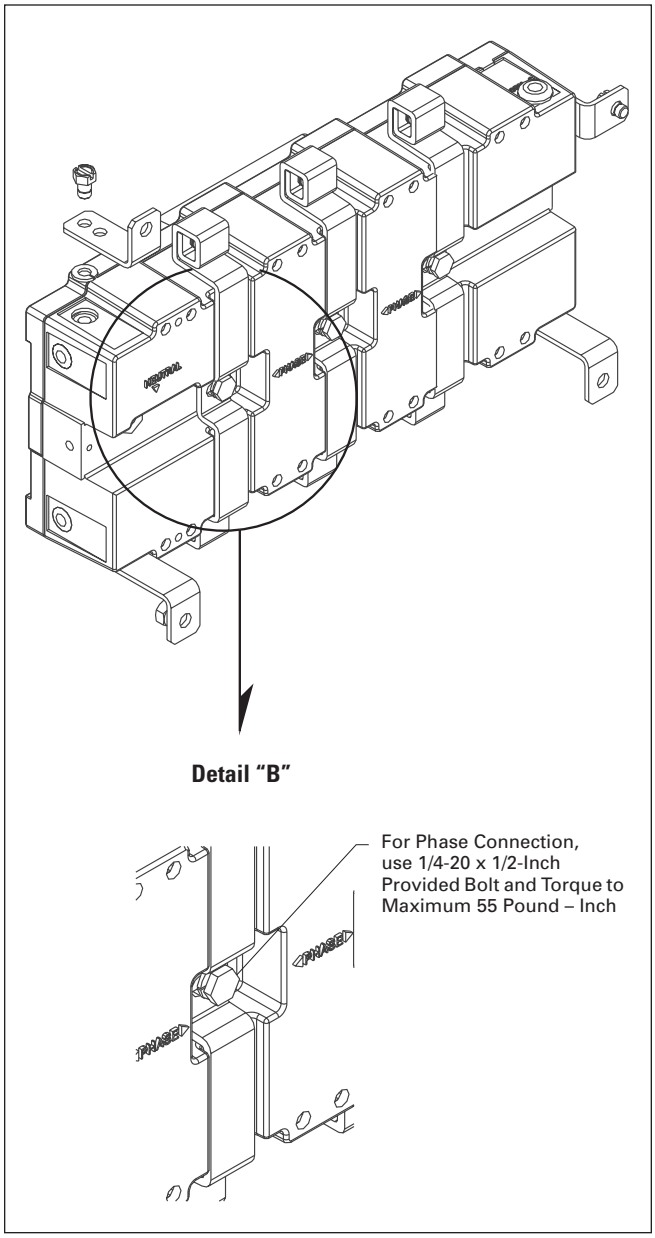

Figure 2. Torque Specification 2

2.7.2 Clipper Power System — Visor Series — Retrofit Installation Wiring Diagrams

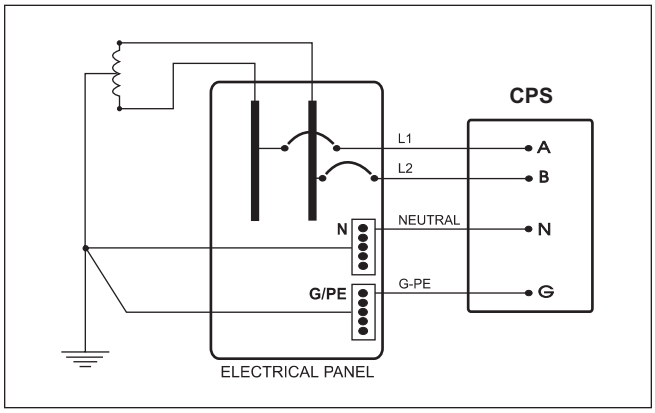

Figure 3. Single-Phase (Split-Phase): 3-Wire + Ground/PE — Voltage Code: 240S

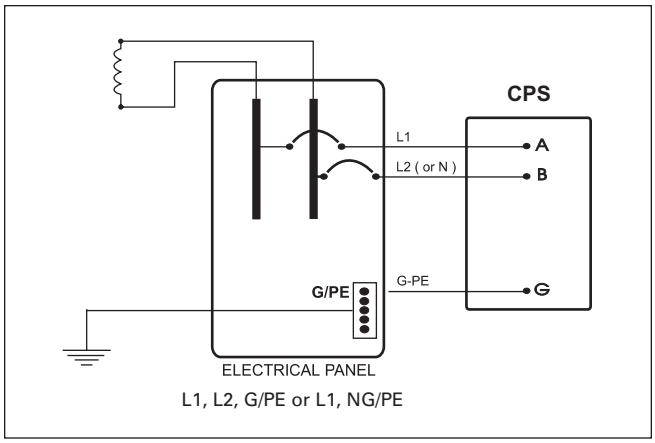

Figure 4. Single-Phase: 2-Wire + Ground/PE — Voltage Code: 240S

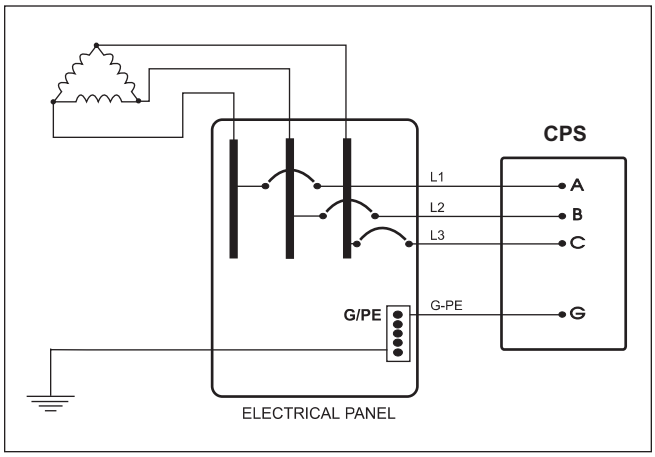

Figure 5. 3-Phase Delta: 3-Wire + Ground/PE — Voltage Codes: 240D, 480D and 600D

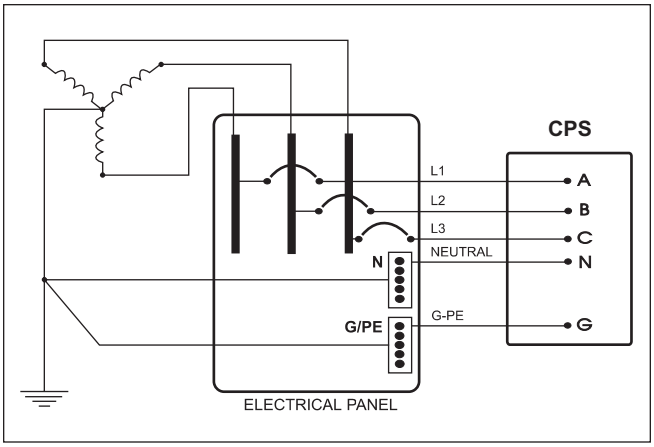

Figure 6. 3-Phase Wye: 4-Wire + Ground/PE — Voltage Codes: 208Y, 400Y, 480Y and 600Y

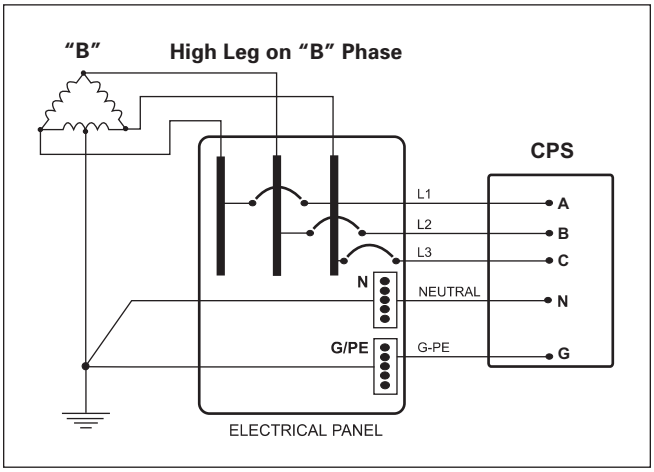

Figure 7. High Leg Delta: 4-Wire + Ground/PE — Voltage Code: 240H

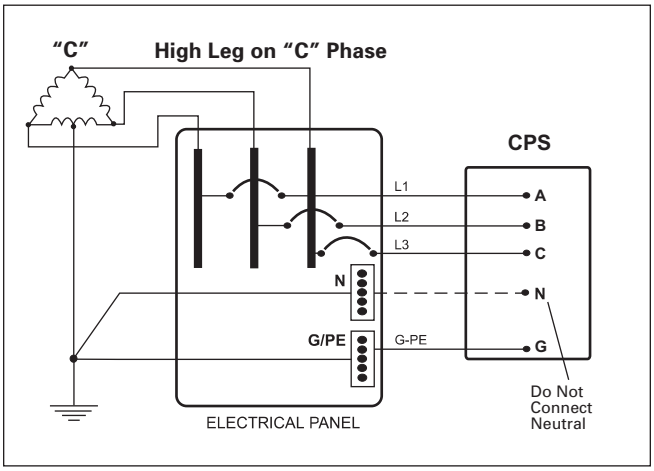

Figure 8. High Leg Delta Source Using 3-Phase Delta: 3-Wire + Ground/PE — Voltage Code: 240D

Note: For high leg Delta applications, Phase "B" on the Visor is the high leg. For applications with Phase "C" as the high leg, use a Visor configured for 3-phase Delta application not connecting the neutral as indicated above in **Figure 8**.

2.8 Ordering Guidelines

Table 3. Visor Integrated

CPS 100 480Y S C

Surge Ratings
100 = 100 kA/Phase
120 = 120 kA/Phase
160 = 160 kA/Phase
200 = 200 kA/Phase
250 = 250 kA/Phase
300 = 300 kA/Phase
400 = 400 kA/Phase
500 = 500 kA/Phase

Diagnostics Package
A = AdVisor c/w Status indicator lights on each phase. Form "C", Audible Alarm — Enable/Disable.
S = SuperVisor c/w Status indicator lights on each phase. Form "C", Audible Alarm — Enable/Disable. Transient counter, Push-to-test, PQ meter (no date stamp).
N = NetVisor c/w Status indicator lights on each phase. Form "C", Audible Alarm — Enable/Disable. Transient counter, Push-to-test, PQ meter (and date stamp). Modbus® and Ethernet Communication Port, % life remaining, % THD voltage.

Integrated
A = Panelboards (PRL1A, 2A, 3A)
B = Remote monitor device panel (Switchgear, Busway)
C = MCC Version
Y = Standard Integrated Display c/w mounting plate (OEM)
Z = Remote monitor panel c/w mounting plate (OEM)

Classic Version (Warranty & PRL4/SWBDs)
D = Bottom Terminals (BT) Top Mount
E = Bottom Mount (BX) ①
F = Top Terminals (TT)
G = Right Terminals (RT)
H = Left Terminals (LT)
J = DSII Switchgear (SG)
I = Left Terminals (LT) c/w Class CC Fusing
X = Right Terminals (RT) c/w Class CC Fusing
W = Bottom Terminals (TX) ① Top Mount

① Canadian versions (requires French labels).

Note: CC fusing provides 200 kAIC (listed fuse) D – H, I and X used for PRL4 and Switchboards.

Note: NetVisor offering not available on versions A and C.

Note: 600Y and 600D D, E, F, G, H, J, W include Surge Rated fusing.

Voltage				Voltage Codes
120/208 127/220 240 V	**230/400 400 V**	**277/480 480 V**	**347/ 600 600 V**	
220Y	—	—	—	= 220/127 3-Phase Wye (4W+G) (Mexico)
240S	—	—	—	= 120/240 Single Split-Phase (3W+G)
240H	—	—	—	= 3-Phase Delta High Leg (4w+G) (High Leg on "B" Phase Only)
208Y	**400Y**	**480Y**	**600Y**	= 3-Phase Wye (4W+G)
240D	—	**480D**	**600D**	= 3-Phase Delta (3W+G)

Table 4. Visor Retrofit

CPS 100 220Y S K

Surge Ratings
100 = 100 kA/Phase
120 = 120 kA/Phase
160 = 160 kA/Phase
200 = 200 kA/Phase
250 = 250 kA/Phase
300 = 300 kA/Phase
400 = 400 kA/Phase
500 = 500 kA/Phase

Diagnostics Package
A = AdVisor c/w Status indicator lights on each phase. Form "C", Audible Alarm — Enable/Disable.
S = SuperVisor c/w Status indicator lights on each phase. Form "C", Audible Alarm — Enable/Disable. Transient counter, Push-to-test, PQ meter (no date stamp).
N = NetVisor c/w Status indicator lights on each phase. Form "C", Audible Alarm — Enable/Disable. Transient counter, Push-to-test, PQ meter (and date stamp). Modbus and Ethernet Communication Port, % life remaining, % THD voltage.

Integrated
K = Standard (NEMA 1, 3R)
L = Flushmount (NEMA 1)
M = Standard (NEMA 1, 3R) c/w DS ②
N = NEMA 4X
O = NEMA 4X c/w DS
P = NEMA 12
Q = NEMA 12 c/w DS ②

② DS = Disconnect switch.

Note: NetVisor not available on suffix "L" types.

Voltage				Voltage Codes
120/208 127/220 240 V	**230/400 400 V**	**277/480 480 V**	**347/ 600 600 V**	
220Y	—	—	—	= 220/127 3-Phase Wye (4W+G) (Mexico)
240S	—	—	—	= 120/240 Single Split-Phase (3W+G)
240H	—	—	—	= 3-Phase Delta High Leg (4w+G) (High Leg on "B" Phase Only)
208Y	**400Y**	**480Y**	**600Y**	= 3-Phase Wye (4W+G)
240D	—	**480D**	**600D**	= 3-Phase Delta (3W+G)

Section 3 Operating Features

The SPD is a passive device and does not require regular servicing. To keep you informed of the SPD's operating status, each Visor is equipped with status indicator lights.

3.1 Internal Fusing and Status Indicator Lights

All units are equipped with integral fusing. Should the SPD fail and create a short circuit, the overcurrent protection will isolate the fault. These integral fuses are not replaceable.

All units are equipped with green/red LED status indicator lights on each phase. When the green light is illuminated, the system is operating properly. In the unlikely case the fuse opens, the LEDs will change to red and an audible alarm will signal a fault.

Form C contacts are used for remote indication of SPD status. Shown in the de-energized state — fail-safe type.

Table 5. Size and Color Code for Form C Contact

Contact	AWG	Color
NC	14	Orange/White
NO	14	Red/White
COM	14	Blue/White

3.2 Monitoring Options

3.2.1 AdVisor Display

The AdVisor display option has the following features:

- Fuse sensing circuitry that identifies a short circuit failure and changes the status indicator lights.
- Audible alarm that can be disabled by a pushbutton.
- An "Alarm Disabled" indicator in the form of a red LED.

AdVisor Display

3.2.2 SuperVisor™ Display

The SuperVisor display option has the same features as the AdVisor, plus a multifunction LCD screen for displaying the following parameters:

- Phase voltages.
- Surge counts.
- Sag counts.
- Swell counts.
- Outage counts.

This display is controlled by STEP and RESET pushbuttons. The STEP switch is used to scroll between the above parameters, and the RESET switch is used to reset the counters to zero.

A TEST function pushbutton is used to check the monitor functioning by inputting a false fuse opening signal, and causing the red LEDs to illuminate.

SuperVisor Display

3.2.3 Remote Status Indication (Standard Feature)

All Visor monitor displays are equipped with isolated single Form C relay contacts. These dry contact terminals are identified as NO (normally open), NC (normally closed), and COM (common). The Form C contacts may be wired to one or more remote locations to identify a change of status. Check the operation of the Form C relay monitoring contacts by switching the power OFF and back ON.

Note: Contacts are rated up to 1A/220 Vac.

For information on NetVisor Display, refer to Instruction Manual IM01001001E.

3.2.4 Remote Display Panel (RDP) Option Cables

The Visor Series monitoring displays have the capability to be remotely mounted. If you order the catalog style that has suffix "B" or "Z", e.g., CPS200480YSB or CPS200480YSZ, then you need to order the separate RDP cable to connect from the SPD base unit to the display. The following cable options are available (each RDP includes a terminal block for wiring point to point, if desired):

- Ribbon cables: 3 ft. and 6 ft. lengths for connecting the RDP to the SPD for "B" and "Z" suffix units only.
- DB15 cable: Available in either 8 ft. or 16 ft. lengths, this cable is a 600 V class and has DB15 male connectors on each end.

Table 6. RDP Cable Options (AdVisor and SuperVisor Only)

Description	Catalog Number
3 ft. Ribbon Cable for RDP	**CPSRIB03**
6 ft. Ribbon Cable for RDP	**CPSRIB06**
8 ft. DB15 Cable for RDP	**CPSDB08**
16 ft. DB15 Cable for RDP	**CPSDB16**
8 ft. DB15 Cable for RDP ①	**CPSNVDB08**
16 ft. DB15 Cable for RDP ①	**CPSNVDB16**

① RDP cable options for NetVisor only.

Section 4 Troubleshooting

4.1 Life Expectancy

Note: The Visor is not field repairable.

A properly applied SPD is designed to provide over 25 years of life expectancy. These units will not fail due to degradation of internal components, even when exposed to continued high-energy induced surges.

Visor unit reliability has been verified by extensive testing at independent lightning laboratories. These tests confirm the suppression circuitry can meet the published surge current ratings.

Note: The Visor unit can withstand thousands of repetitive induced lightning surges on the ac powerline. These test levels are significantly higher than IEEE recommended surges (as published by IEEE C62.41).

4.2 What Causes an SPD to Fail?

The Visor is designed and tested to survive thousands of high-energy surges. If the unit becomes damaged, the failure is typically due to the following causes:

- Inadequate grounding.
- Incorrect product application (Wye into a Delta voltage system).
- Temporary overvoltage (TOV). This rare event occurs when the electrical system experiences a fault that results in rms overvoltage in one or more phases.

Refer to the following **Section 4.4** on troubleshooting.

When the voltage rises over 25% above the nominal operating voltage, the internal suppression components are damaged as they attempt to shunt this prolonged multi-cycle overvoltage event.

4.3 Common Causes of SPD Problems

SPDs are applied to electrical systems to mitigate surges, transients, impulse or spikes. By definition, surges are a random high magnitude short-term voltage disturbance. These high impulses can cause havoc to electronic devices if no protection is applied.

See **Figure 9** — Voltage Transient. This image represents a transient voltage surge on the 60 Hz ac sine wave. The transient is very short in duration but very high in magnitude from the nominal ac line voltage. Tests have shown that the greater the amplitude of the surge voltage, the greater the risk of damage occurring to downstream electronic systems. Additionally, voltage transients originate from a variety of sources, externally from lightning and utility faults, and internally generated from switching loads, electronic power supplies, etc.

4.3.1 Voltage Regulation

Problems associated with voltage regulation are more commonly understood since these events happen over very long time periods. Voltage surges should not be confused with voltage regulation problems. By definition, voltage surges occur in the microsecond range and voltage regulation is defined as having a duration of 1 cycle to many cycles or even hours. Voltage regulation can only damage an SPD if the voltage rises near or above its MCOV (maximum continuous operating voltage).

4.3.2 Temporary Overvoltage (TOV)

Full detailed explanations can be found in the IEEE (Institute of Electrical and Electronics Engineers) publication often referred to as the "Emerald Book." TOV or swells are 60 Hz voltage events that can occur from 1 cycle to a few seconds. See **Figure 10** — Line Voltage Swells (TOV) and Sags. The normal ac sine wave in reference to the swell and sag clearly illustrates the difference in the types of events. TVSS or SPDs are devices that shunt surge events — microsecond events. TOV will often last for cycles and fail MOV-based SPDs.

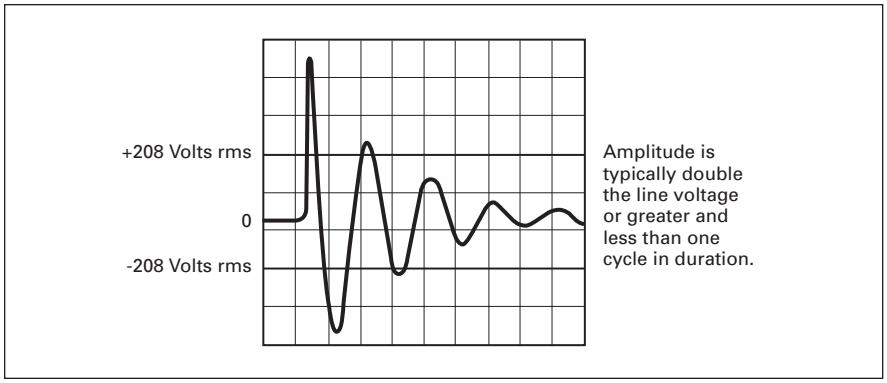

Figure 9. Voltage Transient

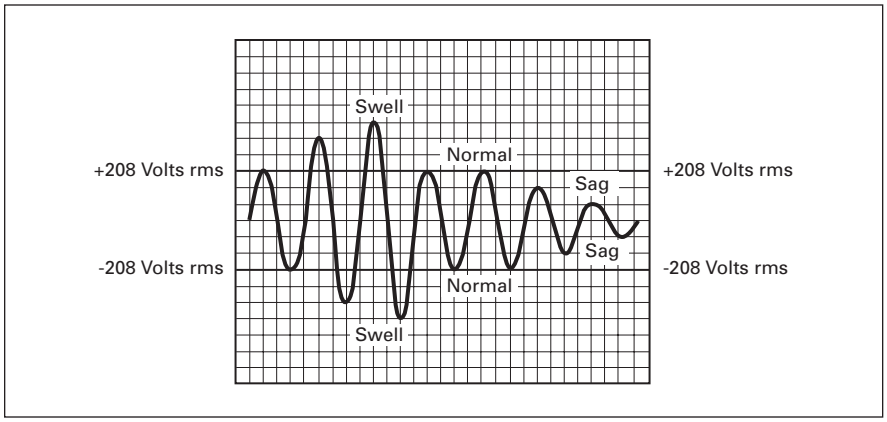

Figure 10. Line Voltage Swells (TOV) and Sags

4.4 Troubleshooting

The Visor is a rugged suppression device. In the unlikely case that the indicator lights change status, audible alarm or remote alarms are activated. First contact our Application Engineers at (800) 809-2772 (option 1, sub-option 3). They will help determine the cause of your problem and direct you to the warranty process if applicable.

4.4.1 Clipper Power System Visor Series Troubleshooting Guide

Improper installation of the TVSS at site is the most common application problem. Please follow these instructions carefully for proper TVSS operation.

Integrated

1. The panelboard or switchboard should be installed and connected to the electrical distribution system as per local codes.
2. Prior to energizing, confirm the TVSS model suits the application voltage. For example, a 208-volt, 3-phase, 4-wire system voltage — user should have a CPSXXX**208Y**XA Visor model (208Y voltage). The XXX refers to the kA rating, 100 – 500 kA, and the X refers to the display, either AdVisor or SuperVisor (A or S). See **Table 7** below.

Table 7. Numbering Definition

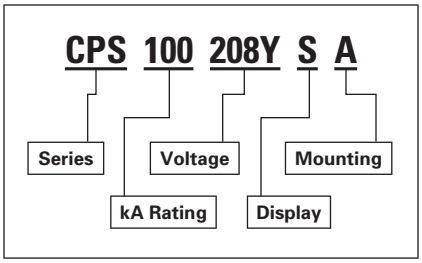

For example, a 480-volt, 3-phase, 3-wire system voltage — user must have a CPSXXX**480D**XA Visor model (480D voltage).

A silver UR label with the Visor model number is always applied on the top right side of the TVSS. This label has the model number on it (see image below).

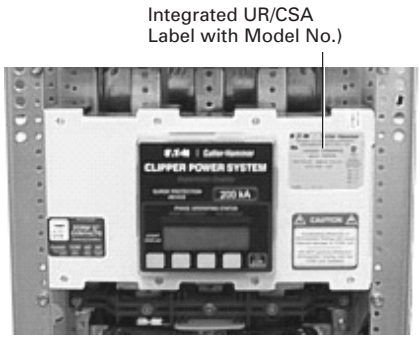

Clipper Power System

3. For the 3-phase, 4-wire application, confirm the neutral wire is connected to the panelboard or switchboard neutral bus and to one on the Visor. The Visor has two neutral connection points, bottom left and bottom right. Connect to one only.

For integrated panels, a neutral cable will be connected to the Visor TVSS and left coiled loose for contractor termination to panelboard neutral bus upon installation of panel.

4. Confirm that the Visor is grounded. In panelboards and switchboards, the Visor is grounded to the chassis frame. See photo to the right.

5. Once you have confirmed all of the above, the TVSS is ready to be energized. Power can safely be applied to the panel or switchboard.

For retrofit installation instructions, refer to Page 3.

PRL1A with Integrated Visor TVSS

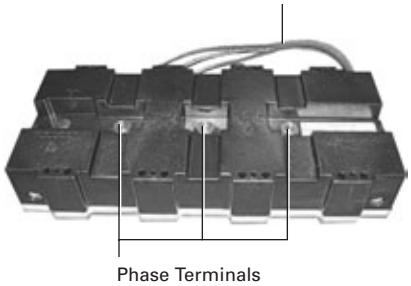

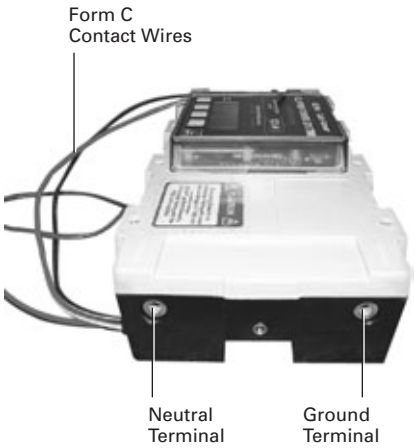

Visor Integrated Unit

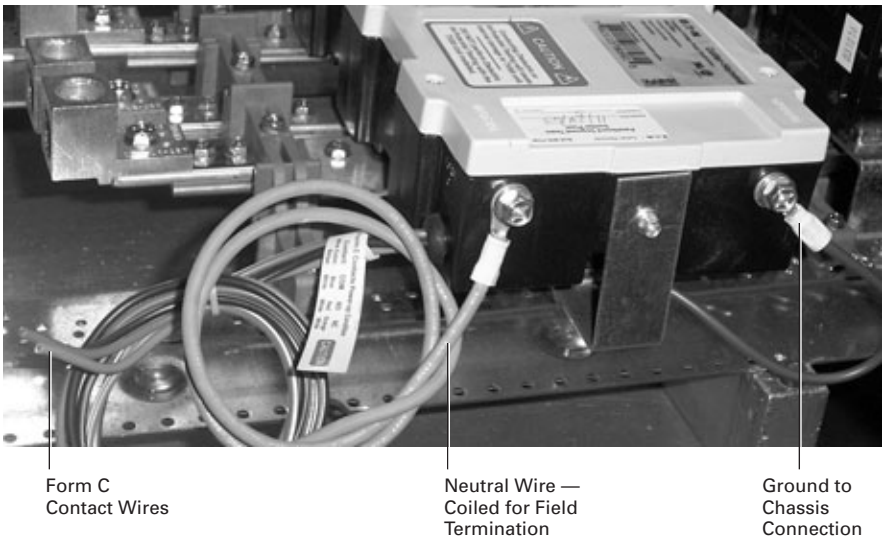

View of Integrated Visor in PRL1A Panel — Exposed Chassis View Showing Connection Points

4.4.2 Troubleshooting — AdVisor Display

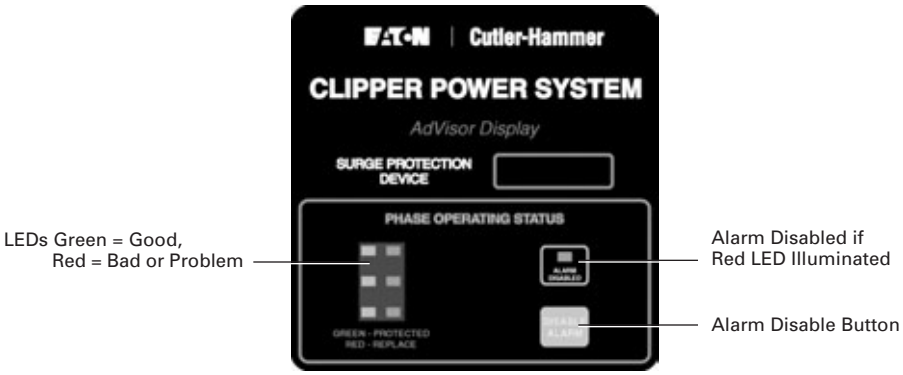

Clipper Power System AdVisor Display

Table 8. AdVisor

AdVisor Display	Symptom	Cause	Solution
	All LEDs are green, no alarms.	Normal operation, 3-phase configuration.	■ N/A
	Two green LEDs ON.	Normal operation, split-phase configuration.	■ N/A
	All green LEDs ON. Alarm disabled LED ON.	Normal operation, alarm disabled.	■ N/A ■ Press Disable Alarm button to re-enable alarm.

Table 8. AdVisor (Continued)

AdVisor Display	Symptom	Cause	Solution
	Red LEDs ON, buzzer ON.	**Lost Neutral (Condition 1)** Neutral conductor not connected or poor connection (intermittent).	■ Confirm Neutral connection on TVSS on lower left or right-hand side of unit. ■ Is Neutral integrity OK? ■ Measure L-G, L-N and N-G voltage. L-N and L-G should be nearly equal and N-G voltage should be less than 3 volts (for 3-phase, 4-wire system).
	All LEDs OFF, buzzer OFF.	**Lost Neutral (Condition 2)** Neutral conductor not connected or poor connection (intermittent).	■ Confirm Neutral connection on TVSS on lower left or right-hand side of unit. ■ Is Neutral integrity OK? ■ Measure L-G, L-N and N-G voltage. L-N and L-G should be nearly equal and N-G voltage should be less than 3 volts (for 3-phase, 4-wire system).
	One or more red LEDs ON, buzzer ON.	Lost phase voltage, no voltage on specified phase.	■ Confirm corresponding TVSS phase connection terminals are connected. ■ Check breaker output voltage. ■ Check panel (breaker input) voltage.
		Internal fuse blown.	■ Measure terminal voltage with multimeter and if voltage is in spec. ■ Call support (800) 809-2772, option 1, sub-option 3. ■ Press DISABLE ALARM button on display.

4.4.3 Troubleshooting — SuperVisor Display

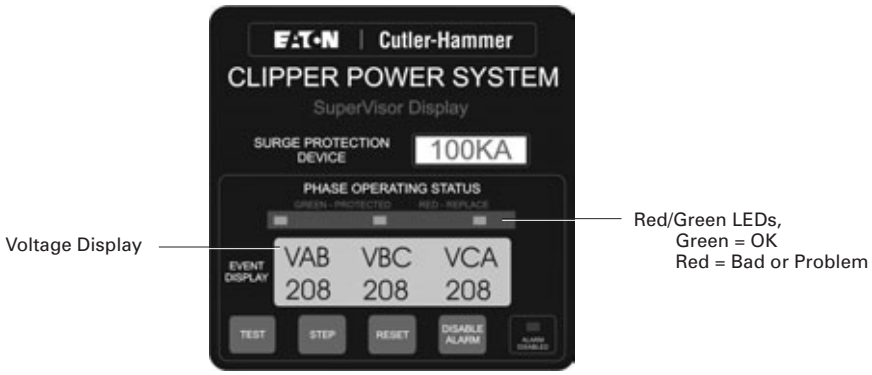

Clipper Power System SuperVisor Display

Note: Refer to the Visor Series installation manual for detailed information on the SuperVisor menu features (Page 9 of IM-CS9-02000).

Table 9. SuperVisor

SuperVisor Display	Symptom	Cause	Solution
	All LEDs are green, no alarms, display OK.	Normal operation, 3-phase configuration.	■ N/A
	Two green LEDs ON.	Normal operation, split-phase configuration.	■ N/A
	All green LEDs ON, alarm disabled, LED ON.	Normal operation, alarm disabled.	■ N/A ■ Press DISABLE ALARM button to re-enable alarm disabled alarm.

Table 9. SuperVisor (Continued)

SuperVisor Display	Symptom	Cause	Solution
	All red LEDs ON, buzzer ON, incorrect voltage display.	**Lost Neutral (Condition 1)** Neutral conductor not connected properly or bad Neutral.	■ Check Neutral connection on TVSS at lower left or right-hand side of unit is good. ■ Good Neutral?
	All LEDs OFF, buzzer OFF, no voltage display.	**Lost Neutral (Condition 2)** Neutral conductor not connected properly or bad Neutral.	■ Check Neutral connection on TVSS at lower left or right-hand side of unit is good. ■ Good Neutral?
	One or more red LEDs ON, buzzer ON, incorrect voltage display on affected phase.	Lost phase voltage, no voltage on specified phase.	■ Confirm corresponding TVSS phase connection terminals are connected. ■ Check breaker voltage. ■ Check panel voltage.
	All LEDs OFF, buzzer OFF, blank LCD display.	Breaker tripped or OFF, no POWER.	■ Check for proper voltage at terminals.
	Blank display and LEDs lit.	Unknown — possible warranty.	■ Call support (800) 809-2772, option 1, sub-option 3. ■ International locations can call (412) 494-3077 or (412) 494-3075.

Table 9. SuperVisor (Continued)

SuperVisor Display	Symptom	Cause	Solution
	All green LEDs ON, buzzer OFF, incorrect voltage display.	Incorrect calibration.	■ Check terminal voltage with digital multimeter. ■ Recalibrate only if measured line voltage is close to nominal. See section on calibration, **Page 15**.
	All red LEDs ON, buzzer ON, incorrect voltage display.	Incorrect voltage.	■ Check terminal voltage with digital multimeter. ■ Check Neutral connection.
	One or more red LEDs ON, buzzer ON, correct voltage display.	Internal fuse blown.	■ Measure terminal voltage with multimeter and if voltage is in spec, then call support at (800) 809-2772, option 1, sub-option 3. ■ Press DISABLE ALARM button on display.
	One or all counters not resettable.	Memory lock-up.	■ If pressing the RESET button does not reset the counters, turn OFF the power to the unit, wait for 5 – 10 seconds, turn ON the unit, ■ Press the RESET button for 1 – 2 seconds, then release.

4.5 SuperVisor Calibration Procedure

In some rare cases, the line voltages displayed on the SuperVisor display may be incorrect as indicated in the image below. The Auto Calibration feature is what we actually use in calibrating the SuperVisor in the plant. However, this procedure can be done in the field by pressing the STEP button before power is applied to the unit. Then, the operator selects the system voltage from (208Y to 600Y/D) to be displayed.

It measures the input voltage, and assumes that this is equal to the nominal voltage of the model. So for a 208Y model TVSS if the actual input is 230 V, the display will still be 208 V. It measures and averages a number of cycles then gets a scaling factor that is used in displaying 208 V in this case.

If this procedure is going to be done in the field, then calibration must be performed when the input voltage is close to nominal to get an accurate display. In the factory, we set the voltage to 208 V manually through a variac.

4.5.1 What are the Reasons for the Auto-Calibration Feature?

1. To compensate for the differences in the value of the scaling resistors, offset voltage of the amplifiers in the display.
2. To allow for field adjustment if necessary.
3. Use of one firmware/hardware for all voltages. The SuperVisor display board can display any system voltage from 208 – 600 V.

4.5.2 SuperVisor Calibration Procedure Steps

1. Shut OFF power to the unit.
2. Press and hold the STEP button. Do NOT release (Arrow 2).
3. Apply power to the unit.
4. The display will show:
   Set Voltage — *first row*
   208 Volts Y — *second row*
5. Release the STEP button.
6. Press the STEP button once to scroll through the following voltages:

Select Voltage	
240 V Spt	240 V Split Phase
240 V D/HG	240 V Delta & High Leg
480 V Y/D	480 V Wye/Delta
600 V Y/D	600 V Wye/Delta
400 V Y/D	400 V Wye/Delta
220 V Y/D	220 V Wye/Delta

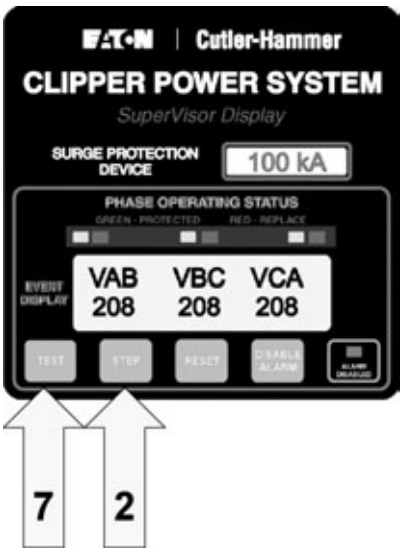

Auto-Calibration

If the STEP button is pressed again, selection returns to 208 volts Y.

7. Press TEST (Arrow 7) button once to accept selected system voltage. Then, the display will go into Auto-Calibration and display the system voltage.
8. Unit is ready to display voltage.

Note: If selection made is incorrect, repeat all steps starting with **Step 2**.

Section 5 Warranty

Eaton Electrical warrants these products for a period of 10 years from the date of delivery to the purchaser to be free from defects in both workmanship and materials. Eaton Electrical assumes no risk or liability for results of the use of the products purchased from it, including but without limiting the generality of the foregoing: (1) The use in combination with any electrical or electronic components, circuits, systems, assemblies or any other materials or substances; (2) Unsuitability of any product for use in any circuit or assembly.

Purchaser's rights under the warranty shall consist solely of requiring Eaton Electrical to repair, or at Eaton Electrical's sole discretion, replace, free of charge, F.O.B. factory, and defective items received at said factory within said term determined by Eaton Electrical to be defective. The giving of or failure to give any advice or recommendations by Eaton Electrical shall not constitute any warranty by or impose any liability upon Eaton Electrical. The foregoing constitutes the sole and exclusive remedy of the purchaser and the exclusive liability of Eaton Electrical AND IS IN LIEU OF ANY AND ALL OTHER WARRANTIES EXPRESSED, IMPLIED OR STATUTORY AS TO THE MERCHANTABILITY, FITNESS FOR PURPOSE SOLD, DESCRIPTION, QUALITY, PRODUCTIVENESS OR ANY OTHER MATTER.

In no event shall Eaton Electrical be liable for special or consequential damages or for delay in performance of the warranty.

This warranty does not apply if the product has been misused, abused, altered, tampered with, or used in applications other than specified on the nameplate. At the end of the warranty period, Eaton Electrical shall be under no further warranty obligation expressed or implied.

The product covered by this warranty certificate can only be repaired or replaced by the factory. A RETURN MATERIAL AUTHORIZATION MATERIAL NUMBER (RMA) must be obtained. Please enter a Vista warranty claim or contact CORE (Center of Returns Excellence) at 1-800-410-2910 for help with entering the claim or an update on your claim status. For help on troubleshooting the Visor SPD, call 1-800-809-2772, option 1, sub-option 3. For a detailed failure report, please send an e-mail with the claim number to: warrantycalgary@eaton.com. Repair or replacement will be returned to collect. If Eaton Electrical finds the return to be a manufacturer's defect, the product will be returned prepaid.

CSA is a registered trademark of the Canadian Standards Association. Modbus is a registered trademark of Modicon, a division of Schneider Electric Industries SA. National Electrical Code and NEC are registered trademarks of the National Fire Protection Association, Quincy, Mass. UL is a federally registered trademark of Underwriters Laboratories Inc.

Eaton Electrical
1000 Cherrington Parkway
Moon Township, PA 15108-4312
USA
tel: 1-800-525-2000
www.eatonelectrical.com

© 2004 Eaton Corporation
All Rights Reserved
Printed in USA
Publication No. IM01001002E/Z-2340
February 2004